CONTEMPORARY COLLECTION

Fractal

GOOD DESIGN AWARD 2022

archiproducts DESIGN AWARDS WINNER 2022

GERMAN DESIGN AWARD 2023

CRISTINA

CRIFT370

The geometry of the prism meets the functionalityof the mixer. The series offered in numerous finishes,is equipped with the technological and functionalpluses that are typical of our brand's products. The namerefers to the geometric figure of the prism. The mixers are made of mainly low-lead brass, and the manufacturing process(from turning and hot pressing of the control lever to the casting in gravity ofthe bathtub and shower body) is carried out at every single stage in-house, anadditional guarantee to the perfect realization of the product. The series is valuable and sought-after both for its mechanical workmanship - the greatestdifficulty lies in keeping the radiuses of the surface always equally sized and strictly geometrical- both for the considerable craftsmanship required in the smoothing, polishing and brushingphases. The body of the mixer is characterised by several flat strips that create thefaces, limited by parallel lines that create the edges.

Before ordering items requiring certifications on particular markets, please check with your sales contact

Technical description

Single-control deck-mounted single-hole bidet mixer, with mechanical mixing, without waste

COMMAND
Single-control

INSTALLATION
Deck-mounted

TYPOLOGY
Mixer

ENVIRONMENT
Bathroom

FLOW RATE
5,6 l/min

FINISHES
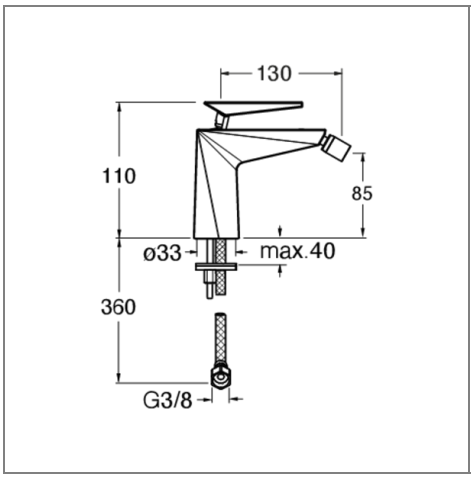
51 - Chrome